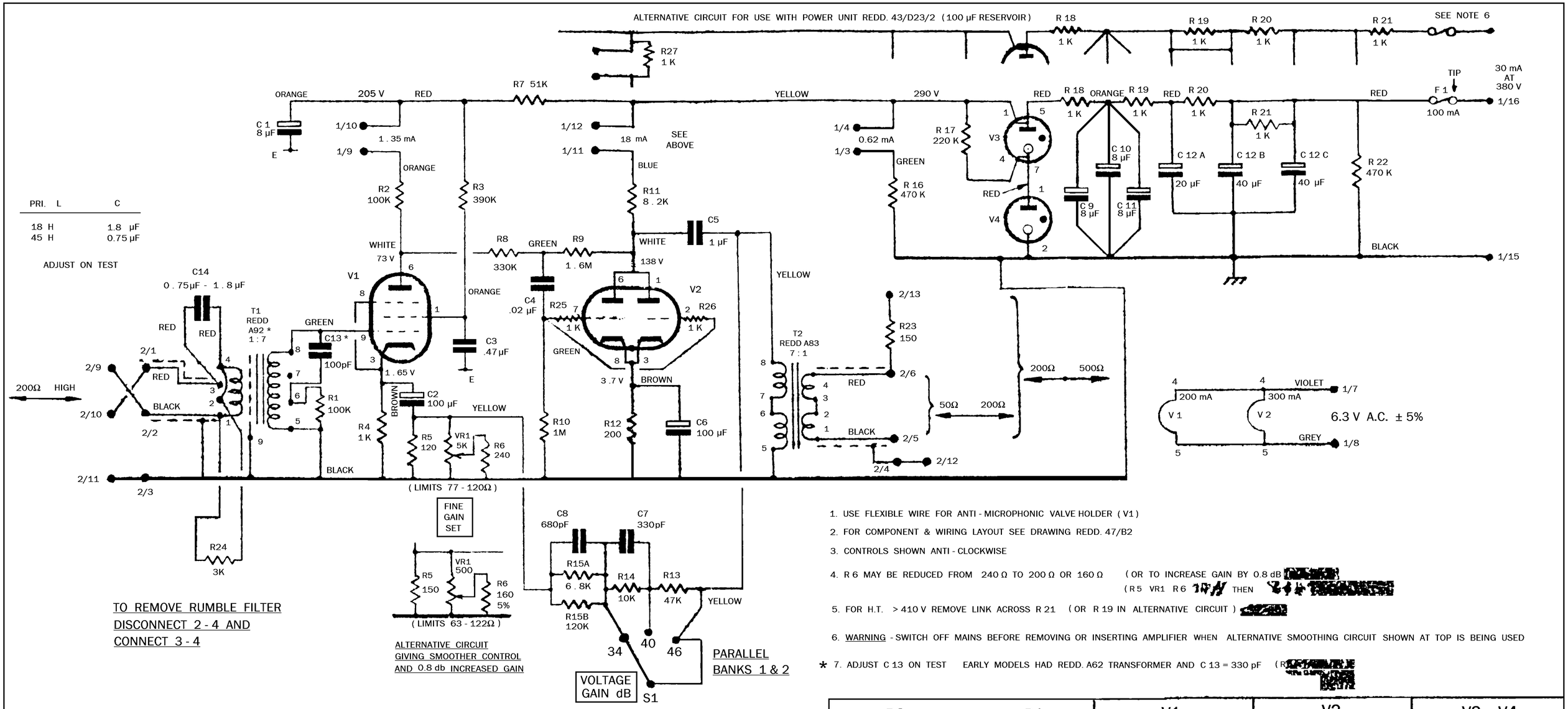

TO REMOVE RUMBLE FILTER
DISCONNECT 2 - 4 AND
CONNECT 3 - 4

ALTERNATIVE CIRCUIT
GIVING SMOOTHER CONTROL
AND 0.8 db INCREASED GAIN

PARALLEL
BANKS 1 & 2

1. USE FLEXIBLE WIRE FOR ANTI - MICROPHONIC VALVE HOLDER (V1)
2. FOR COMPONENT & WIRING LAYOUT SEE DRAWING REDD. 47/B2
3. CONTROLS SHOWN ANTI - CLOCKWISE
4. R 6 MAY BE REDUCED FROM 240 Ω TO 200 Ω OR 160 Ω (OR TO INCREASE GAIN BY 0.8 dB [redacted]
(R 5 VR1 R 6 [redacted] THEN [redacted]
5. FOR H.T. > 410 V REMOVE LINK ACROSS R 21 (OR R 19 IN ALTERNATIVE CIRCUIT) [redacted]
6. WARNING - SWITCH OFF MAINS BEFORE REMOVING OR INSERTING AMPLIFIER WHEN ALTERNATIVE SMOOTHING CIRCUIT SHOWN AT TOP IS BEING USED

* 7. ADJUST C 13 ON TEST EARLY MODELS HAD REDD. A62 TRANSFORMER AND C 13 = 330 pF (R[redacted]

RATINGS GIVEN BELOW ARE MINIMUM PERMISSIBLE

REF	TYPE	REF	TYPE
R 1	1/8 W. 2% H.S.	R 13	1/8 W. 1% H.S.
R 2	2 W. 2% H.S.	R 14	1/8 W. 1% H.S.
R 3	1/8 W. 2% H.S.	R 15 A	1/8 W. 1% H.S.
R 4	1/8 W. 2% H.S.	R 15 B	1/8 W. 5% C
R 5	1/8 W. 2% H.S.	R 16	1/4 W. 2% H.S.
R 6	1/8 W. 2% H.S.	R 17	1/4 W. 20% C
R 7	1/4 W. 5% H.S.	R 18 TO 21	1 1/2 W. 5% W.W. WELWYN [redacted]
R 8	1/8 W. 2% H.S.	R 22	1/2 W. 20% C
R 9	1/8 W. 2% H.S.	R 23	1/8 W. 2% H.S.
R 10	1/8 W. 2% H.S.	R 24	1/8 W. 2% H.S.
R 11	5 W. 5% W.W.	VR 1	MORGANITE BUNAR 50250
R 12	1/8 W. 2% H.S.		

REF	TYPE
C 1	- 20 % + 50 % 450 V PICOPACK
C 2	- 20 % + 50 % 6 V PLESSEY
C 3	20% 500 V WIMA
C 4	20% 500 V METALMITE PIO [redacted]
C 5	20% 350 V
C 6	- 20 % + 50 % 6 V PLESSEY
C 7 , 8	2% 450 V S.M.
C 9 , 10 , 11	- 20 % + 50 % 450 V PICOPACK
C 12 A - B - C	- 20 % + 50 % 450 V PLESSEY CE830
C 13 A.O.T.	2% S.M.
C 14 A.O.T.	5% [redacted] SALFORD ELECTRICAL

REF	TYPE
S.1	ARDENTE 2 BANK , 1 POLE 3 WAY S.1140 / 2B
P 1 , 2	McMURDO RP 16
F 1	K.E. BESWICK ANTI - SURGE TDQ. 134
V1	McMurdo Anti-Vibration Phenolic Insulation
V2	McMurdo Z560131 Phenolic Insulation
V3, V4	McMurdo Phenolic Insulation
R 27	1/10 W. 20% C
R 25 , 26	1/10 W. 20% C

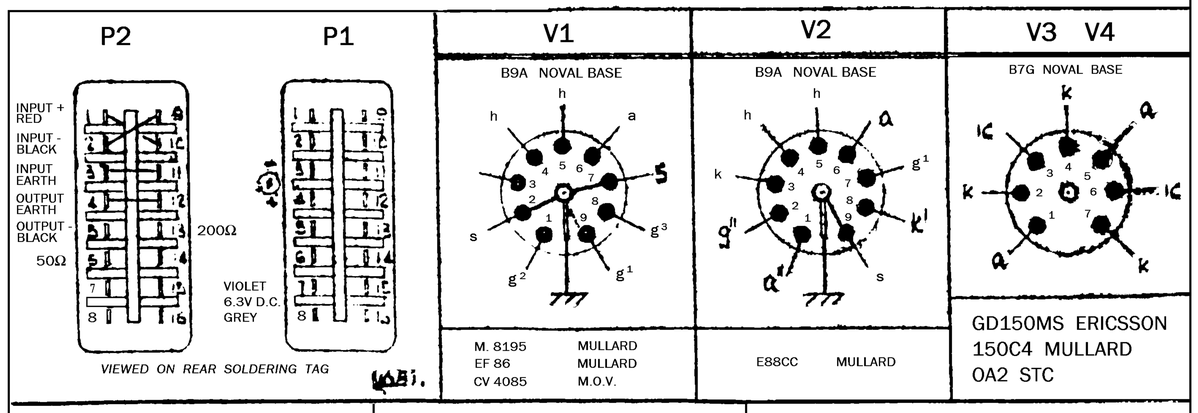

FINISH ———	TITLE LINE AMPLIFIER , CASSETTE TYPE	E.M.I. INTERNATIONAL HAYES, MIDDLESEX RECORD ENGINEERING DEVELOPMENT DEPT.	
MATERIAL ———		THIRD ANLGLE PROJECTION.	DRAWING No. REDD . 47 C1 / 2
DR'N A.J.B.	DATE 1 . 10 . 59	C'K'D	SCALE ———

LIMITS: DECIMAL DIMENSIONS - .005" FRACTIONAL DIMENSIONS up to [redacted] Special thanks [redacted]

H.S. - High Stability W.W. - Wirewound C. - Carbon A.O.T. - Adjust On Test PIO - Paper In Oil S.M. - Silver Mica CV - Common Valve M.O.V. - Marconi & Osram Valves Ericsson - Ericsson Telephones Ltd STC - Standard Telephones and Cables Ltd